SIMPLY STAINLESS

Modular Bar Solutions

SBM-BR-6-0650

SBM-BR-7-0650

SPECIFICATION	
Tops	- High quality 304 grade stainless steel. - 1.2mm gauge, no. 4 Finnish.
Core	- 3mm zinc anneal. - Marine grade protective paint .
Frames	- 30mm square stainless steel tube. - Satin polished, adjustable stainless disc feet.
Servery	- 5mm stainless steel flatbar. - Welded to frame. - 2 fixing holes.
Runners	- Adjustable Runners to suit Glass Racks or DW Racks. - Stainless steel drip tray included.

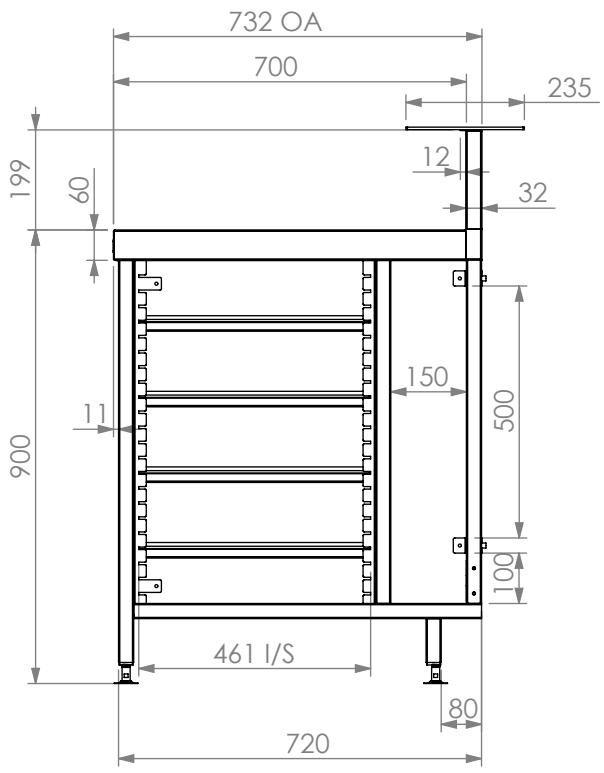

NOTE:
1. 700mm DEEP MODULE ELEVATION.

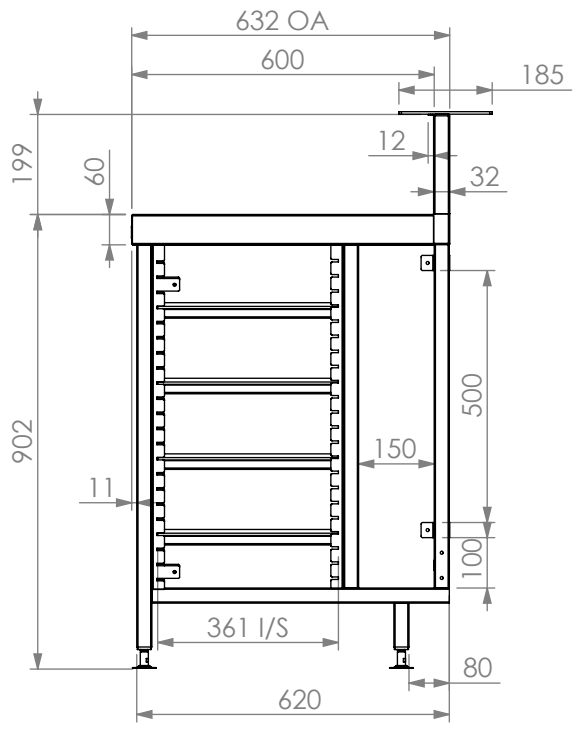

NOTE:
1. 600mm DEEP MODULE ELEVATION.

BASKET RACK BAR MODULE

SBM-BR	Product Code	Dimensions (mm)	Unit weight (Kg)	Load Capaciy (Kg)
	SBM-BR-6-0650	650x600x900	32	120
	SBM-BR-7-0650	650x700x900	34	130

100% RECYCLABLE STAINLESS STEEL

100% RECYCLED 100% RECYCLABLE